# Scrolling Poster Display Engine

# *SPDE-76A*

# User's manual

(Suitable for SPDE-76A, 76AE and 76AX with Firmware A76GA/A76GB)


Overview - - - - - - - - - - - - - - - - - - - - - - - - - - - - - - - - 2

Key Components - - - - - - - - - - - - - - - - - - - - - - - - - - - 3

Assembling the Rollers - - - - - - - - - - - - - - - - - - - - - - 4

Installing the Rollers - - - - - - - - - - - - - - - - - - - - - - - - 5

Electrical Wiring - - - - - - - - - - - - - - - - - - - - - - - - - - - 6

Programming with HHP09 - - - - - - - - - - - - - - - - - - - - 7

Preparing Poster Scroll - - - - - - - - - - - - - - - - - - - - - - - 9

Loading Poster Scroll - - - - - - - - - - - - - - - - - - - - - - - - 10

Advanced Operations - - - - - - - - - - - - - - - - - - - - - - - - 11

Troubleshooting - - - - - - - - - - - - - - - - - - - - - - - - - - - 12

Specifications - - - - - - - - - - - - - - - - - - - - - - - - - - - - - 13

*[Appendix] SPDE-76AX - - - - - - - - - - - - - - - - - - - - - 14*

# Overview

Congratulation on purchasing SPDE-76A, a product that represents the latest technology in scrolling poster display. Please read this manual carefully before using the product.

SPDE-76A offers a scrolling advertising solution that is reliable, user-friendly and versatile. The product comprises a pair of integrated rollers, a main controller, a power supply unit and a handheld programmer. The innovative control logic removes the need for external sensors and foil stickers (markers), and makes scrolling advertising signs much more reliable and easier to use.

## *What's new with SPDE-76A*

***Reduced noise*** *– SPDE-76A adopts a number of noise reduction designs, including absorber mechanism and improved motor control. The noise level is significantly lowered.*

***More user-friendly*** *– SPDE-76A is much easier to learn and use, thanks to the latest handheld programmer HHP09, which features a built-in micro-controller, an LCD display and a bilingual menu system.*

***Built-in Timers*** *– SPDE-76A has built-in RTC (Real Time Clock) and offers two user-programmable timers, which control the scrolling system and lighting system respectively.*

***Richer functionality*** *– New functions of SPDE-76A include position finetuning, home poster selection, poster unwinding and many more.*

### Disclaimer

While every effort has been made to ensure that the information contained in this User's Manual is accurate and up-to-date, no liability for error or omission will be accepted. Beidouxing Science and Technology Development Co. Ltd. (BDX Signs) reserves the right to change the functions, features or specifications of its products at any time without prior notice.

### Intellectual Property

Information contained in this User's Manual is the property of Beidouxing Science and Technology Development Co. Ltd. and may not be reproduced without prior written consent.

SPDE, Scrolling Poster Display Engine, SPDS, Scrolling Poster Display System, Scroll-a-Sound, POPS (Power-Off Poster Settling) are trademarks of Beidouxing Science and Technology Development Co. Ltd.

### Safety Notes

To ensure continuous safe operation of the product, please read the following safety notes carefully. Please contact us if you have any question or require additional information concerning product safety.

**Electricity safety**

- The product should be assembled and installed by qualified electrician.
- Power source for the product must matche the product specifications; power outlet must be properly earthed.
- Disconnect the main power supply if any of the following occurs:
  - Unusual noise or odour is noticed
  - Any electrical cable is found damaged
  - Any component has been exposed to water or other liquid
  - Any component appears physically damaged

**Operational safety**

- Follow all warnings and instructions marked on or supplied with the product.
- Install the product only on structure with adequate strength.
- Install the product only in appropriate weatherproof and dust proof housing.

*Users who only need to learn how to use complete BDX scrolling sign fitted with SPDE-76A may go straight to Chapter* ***Programming with HHP09****.*

# Key Components

| Descriptions | Quantity | Picture |
|---|---|---|
| **Aluminium Hollow**<br>Specially designed extruded aluminium round hollow. Usually supplied in 3 metre length but can be pre-cut to custom sizes. Two holes need to be drilled on each hollow, one for motor fitting and the other for the scroll-end detector. | **2** | |
| **Motor Assembly**<br>Complete with BLDC motor, roller header, bearing, driving block, cables and connector. To be installed inside the aluminium hollow. | **2 sets** | |
| **Scroll-End Detector Assembly**<br>Complete with cast aluminium roller header, bearing, sensor, detector tip, cables and connector. To be installed inside the aluminium hollow.<br>*Note: The detector tip is directional.* | **1 pair** | |
| **Main Controller**<br>Electronic circuitry that processes all incoming signals, controls the scrolling movement and poster positioning. | **1** | |
| **Power Supply Unit**<br>Switching mode power supply unit with regulated 24V DC output.<br>*Note: Various types of power supply units are available for different power sources (e.g. 200-240 VAC, 100-120 VAC, 12VDC, 24VDC, etc. Power supply for 200-240 VAC is supplied unless otherwise specified )* | **1** | |
| **Mounting Hardware**<br>Including a set of metal plates, plastic saddles, bridges and fasteners that are necessary to install the assembled rollers. | **1 set** | |
| **HHP09 Hand-held Programmer**<br>A programming tool and monitor with an LCD display four buttons and a shielded USB cable. | **1** | |
| **Cables**<br>Including two 1.5M motor extension cables, two 5M scroll-end detector extension cables, one hand-held programmer socket with 0.5M ribbon cable and one 0.3M DC power cable. | **1 set** | |

# Assembling the Rollers

### 1. Preparing the aluminium hollows

The aluminium hollows should be cut to correct length and drilled with two holes as shown below.

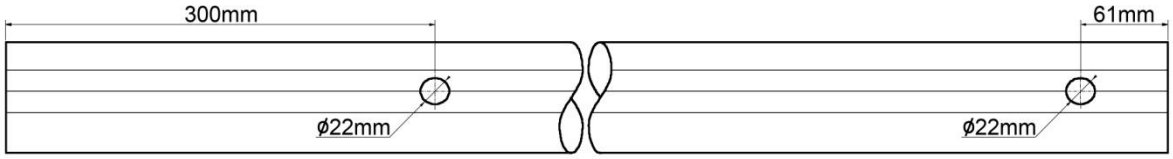


For smooth insertion of the motor assemblies and the scroll-end detector assemblies, please use a file to chamfer the inner edges of the rollers' two ends, and to remove all burrs and sharp edges.

### 2. Insert the motor assemblies

### 3. Fix the motor assemblies

Tighten the screw gently so that the motor assembly is fixed to the aluminium hollow.

To remove the motor assembly from an aluminium hollow, loosen the screw (but do not unscrew it) and pull the assembly out.

Aluminium hollows fitted with motors look like this.

### 4. Insert the scroll-end detector assembly

Hold down the scroll-end detector tip and align it to the detector hole on the aluminium hollow, gently insert the assembly into the aluminium hollow.

Make sure that the detector tip can pop out and can be pushed in freely.

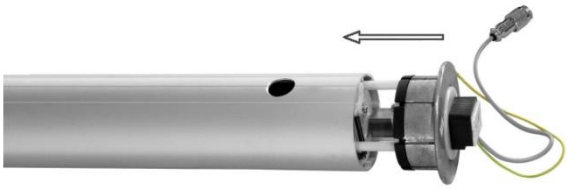

Aluminium hollows fitted with scroll-end detectors look like this.

To take the scroll-end detector out of the aluminium hollow, press down the detector tip first and gently pull assembly out.

# Installing the Rollers

**1.** Install the four plastic saddles to the corners of the main frame/casing.

BDX aluminium casing provides channels for easy fitting. If non-BDX casing is used, please fix the plastic saddles on the metal plates first before fitting them in the casing.

**2.** Press the header of the assembled roller into the plastic saddles, run the cables through the channel on the saddles, and fix them with the plastic bridges and screws. Be careful not to damage the cables.

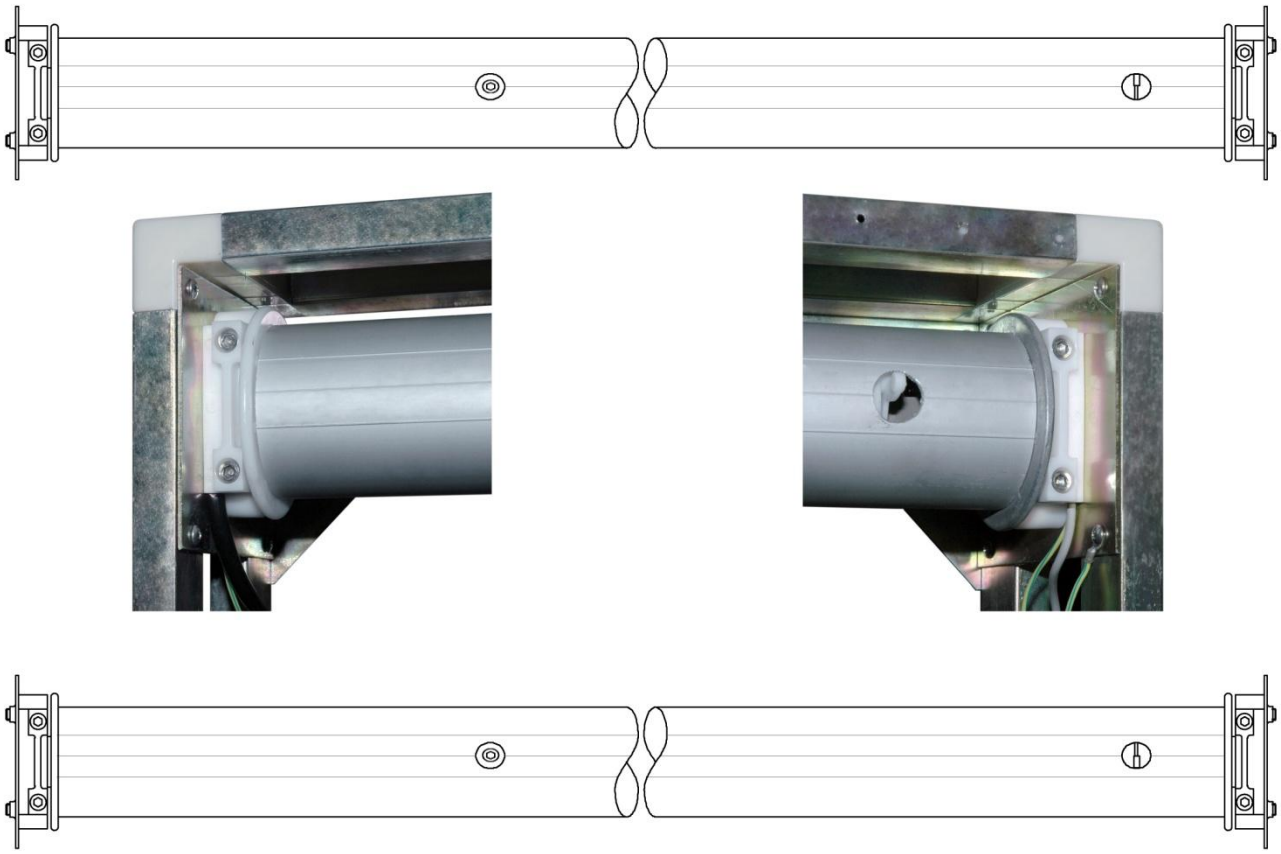

The two rollers should be installed horizontally in a precisely parallel arrangement. The motors should be on the left, and scroll-end detectors on the right.

Please note that the scroll-end detector tips are directional: the tip on the upper roller should hook upward and the one on the lower roller should hook downward.

**Important:** Proper earthing is critical for safety of users and the electronic components. It is extremely important to make sure that:

- The ground from the power source is securely connected to both the earth terminal on the power supply and the metal casing/frame on which SPDE-76 is installed.
- All earth leads from the motor assemblies and scroll-end detectors assemblies are securely connected to the the metal casing/frame in which SPDE-76A is installed.

# Electrical Wiring

Follow following illustrations to connect all the components. It's recommended that all cables run along the frame of the casing and stay as far as possible from the high voltage wirings (e.g. those of electronic ballasts).

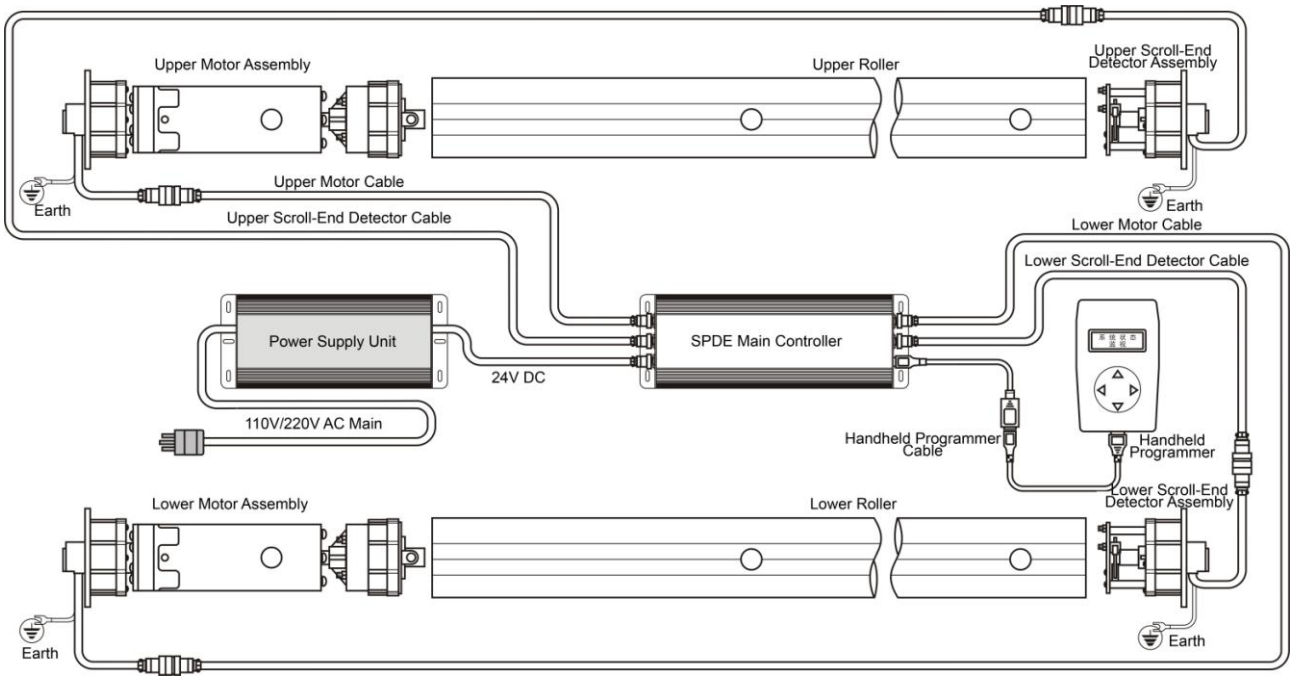

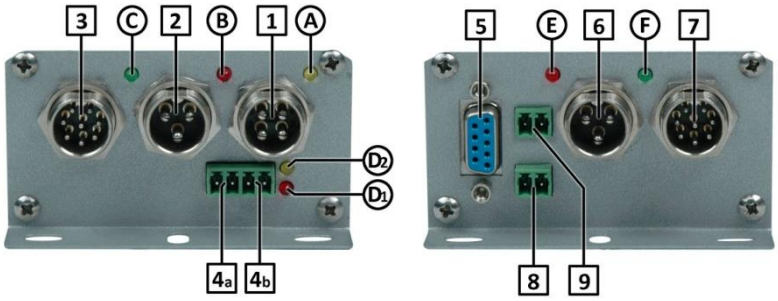


| | |
|---|---|
| 1: 24V DC power supply in (including battery input for POPS) | 8: COM1, synchronisation connector |
| 2: Upper scroll-end detector connector | 9: COM2, expansion connector |
| 3: Upper motor connector | A: Power indicator |
| 4a: Scrolling system timer switch output, for 24V DC relay | B: Upper scroll-end status indicator |
| | C: Upper motor status indicator |
| 4b: Lighting/auxiliary timer switch output, for 24V DC relay | D1: Lighting/auxiliary timer switch status indicator |
| 5: Programmer connector, for HHP09 handheld programmer | D2: Scrolling system timer switch status indicator |
| 6: Lower scroll-end detector connector | E: Lower scroll-end status indicator |
| 7: Lower motor connector | F: Lower motor status indicator |

*Please see [Appendix] for details of the alternative SPDE-76AX main controller*

# Programming with HHP09

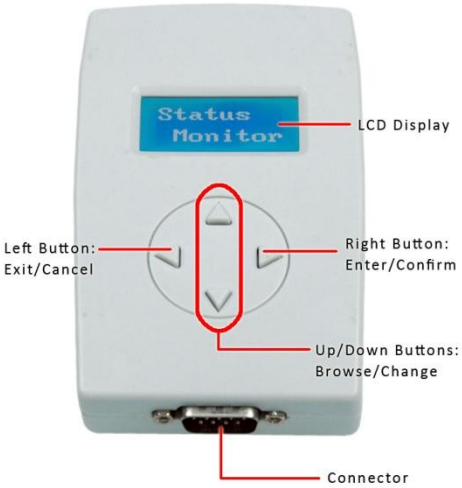


As shown in the right, handheld programmer HHP09 comprises an LCD display and four buttons. The LCD display supports a bi-lingual (English and Chinese) menu system, with which the buttons are very simple to use. HHP09 is connected to the SPDE-76A main controller via a shielded USB cable.

When connected to the main controller, HHP09 will enter the main menu after showing a greeting message briefly. Use the [up] / [down] buttons to browse the menu items; Use the right button to enter the shown function. After entering a specific function, Use the [up]/[down] buttons to change the settings; use the right button to confirm the new setting, or use the left button to exit and return to the main menu.

**1. Two important Functions**

**Emergency Stop**

To immediately stop the scrolling movement, press both [left] and [right] buttons at the same time. This function is particularly useful for installation and testing. Once emergency stop is performed, the scrolling system enters the pauses mode, in which the status monitor function will show "Paused, Restart→". To restart the scrolling system, press the [right] button.

**Full Reset**

To perform a full system reset, press both [up] and [down] buttons at the same time. Full reset includes hardware reset of both the main controller and HHP09 itself.

**2. Function reference**

| Menu Item | Function |
|---|---|
| Status Monitor | This function shows the current status of the scrolling system, including current poster number, lapse of display time, scrolling direction, error messages/codes, etc.<br>If the scrolling system is configured as "slave" in a synchronised operation, the second line of the status display is inverted (i.e. blue text on white background).<br>In standby mode (set by the internal timer), this function shows the current time. |
| Num of Posters | Use this function to set the number of posters on the scroll (2 to 15).<br>The number of posters is an important parameter and must be set correctly for accurate poster positioning. |
| Display Timing | In this function, display timing (HH:MM:SS) of the posters can be set either globally or individually.<br>If 00:00:00 is set for "All" posters, timing for each and every poster may be set individually. Otherwise, the global timing will prevail.<br>*Individual setting may be set to 00:00:00 so that the associated poster can be "bypassed" but this could affect the normal operation and the positioning accuracy especially when the total number of posters is less than four.* |
| Master or Slave | This function set the role of the scrolling system in a synchronised operation.<br>A master system operates on its own timing, and transmits synchronisation signals; a slave system awaits synchronisation signals and operates accordingly.<br>In a synchronised operation, only one system can be set as master; all the rest should be set as slave(s). |
| System Group/ID | This is a reserved function for further development.<br>Each scrolling system can be assigned a system ID or a group ID as required in some applications. |

**2. Function reference (Continued)**

| | |
|---|---|
| Manual Winding | This function is for scrolling the poster up or down by pressing the [up] or [down] button. This is particularly useful for installing/replacing posters, testing the system, etc. |
| System Clock | Use this function to set the system clock (HH:MM) before using the built-in. |
| Scroller Timer | Use this function to enable or disable the timer for the scrolling display, and set the on-time and off-time.<br>*If this scroller timer is disabled, the scrolling display will work continuously as long as the main power supply is present.* |
| Lighting Timer | Use this function to enable or disable the timer that controls the lighting system, and set the on-time and off-time.<br>*If the lighting timer is disabled, the light will stay on as long as the main power supply is present.* |
| Position Finetune | In most cases, the scrolling system can position the posters accurately and automatically. However, if the poster sizes are inconsistent, the positioning accuracy could be affected and finetune might be required.<br>This function allows user to adjust the actual display position of any individual poster in a ±10cm range (except for the first and last posters on the scroll). |
| Home Poster | Home poster is the poster that is displayed when the scrolling movement is turned off by the built-in scroller timer. In this function, home poster can be set to random or any specific poster on the scroll.<br>*If a specific poster is set as home poster, the scrolling system might continue to operate even after the preset off-time till the home poster is brought to display.* |
| Advanced Function | The advanced function brings up a sub-menu, which includes "Advanced Status", "Advanced Settings" and "Advanced Control".<br>**Advanced Status** – This function shows the current status of the scroll-end detectors, the hall effect sensors of the motors, and pulse counters. This is mainly designed for troubleshooting.<br>**Advanced Settings** – This is for changing some motor control parameters, which is not recommended for inexperienced users.<br>**Advanced Control** – This function allow user to wind up and unwind the poster scroll at low speed. It is particularly useful for installing/changing posters. Use [up] and [down] buttons to start; use the [right] button to switch between "Wind" and "Unwind" modes. Note that status of the scroll-end detectors is ignored in this operation. |
| Restore Default | This function restores all factory default settings. |
| Language 简体中文 | Use this function to change the display language (English or Chinese). |

# Preparing Poster Scroll

Poster for SPDE-76A can be produced by large format inkjet printing or screen-printing. While a wide range of materials can be used, stock between 100gsm and 200gm is recommended.

Vinyl banner (PVC base-flex) is generally not recommended for it tends to develop creases over time.

Posters can be joined together with adhesive tapes or BDX Poster Zippers. Either way, the finished poster scroll must be free of creases, and straight and square.

The layout of a poster scroll for SPDE is shown on the right. Calculations of the dimensions are as follows:

| | |
|---|---|
| **Viewing windows ( H0 x W0 )** | (A-40) x (B-109) |
| **Image ( H1 x W1 )** | (A+20) x (B-30) |
| **Overall width ( W2 )** | B-20 |
| **Scroll Length ( H2 )** | n x H1 + 880 (12,000 maximum) |

*Unit: mm*
*A: Axle to axle spacing of the two rollers*
*B: Length of the aluminium hollow*
*n: Number of posters on the scroll*

While SPDE-76A control system supports up to 15 posters, actual number of posters is often restricted by the maximum length of the whole scroll, which is about 12 metres. It is also affected by the size of the sign, the weight of the stock and other factors. Generally, recommended number of posters on a scroll is 3 to 6.

Optionally, extended poster footer may be used for greater installation convenience. Please contact your vendor for details.

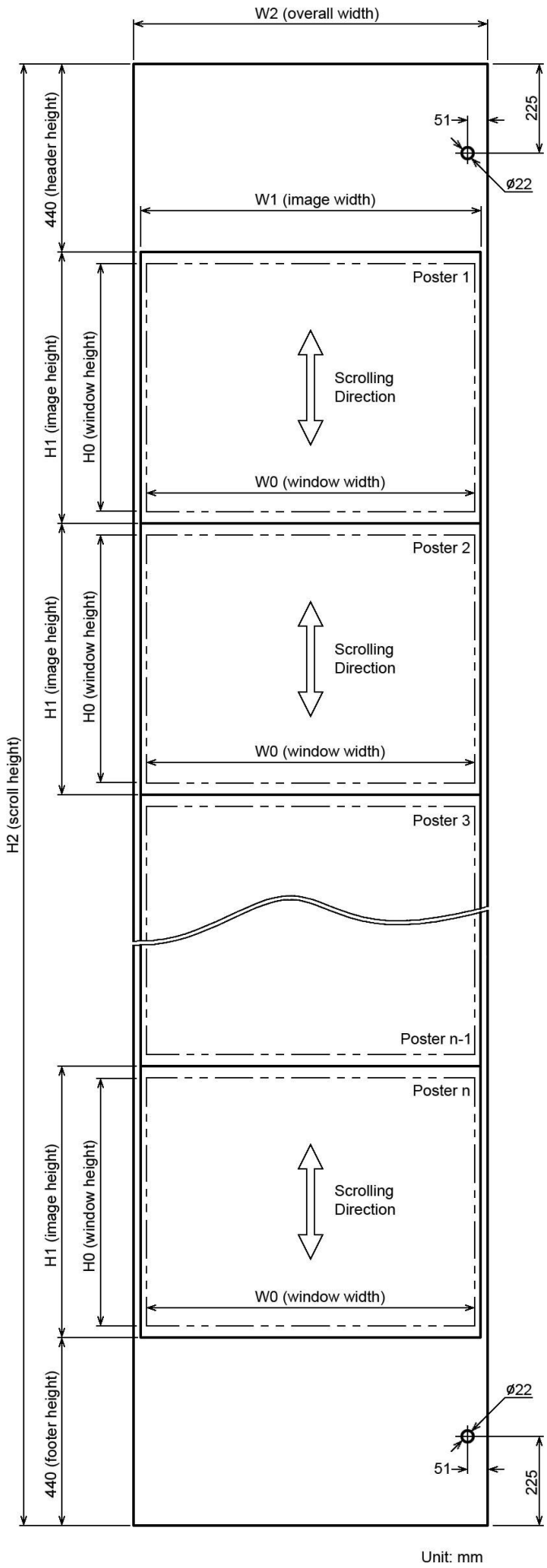

# Loading Poster Scroll

**1. Unloading old poster scroll**

To unload a poster scroll from a system, use the “Advanced Control” in “Advanced Function” (see page 8) to wind the poster scroll all the way up on the upper roller, detach it from the lower roller, then unwind and detach it from the upper roller.

**2. Loading new poster scroll**

The scroll is fixed on the rollers by adhesive tape. The aluminium hollow has been extruded with lines on the outer surface for poster alignment. On the upper roller, align the poster to the line below the scroll end detector hole; on the lower roller, align the poster to the line above the scroll end detector hole.

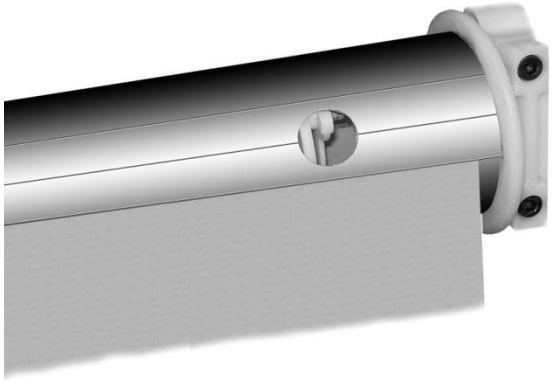

To load a poster scroll,

1) fix the upper end on the upper roller, make sure it’s central and well aligned;
2) use the “Advanced Control” to wind the poster scroll one full turn onto the upper roller, check the alignment of the hole on the poster scroll header and the hole on the aluminium hollow and make sure the scroll-end detector tip can fully pop out. Trim the hole on the poster scroll header using a scalpel if necessary;
3) continue to wind the poster scroll up onto the upper roller till its lower end is close to the lower roller. This can be done using the manual scrolling mode (please refer to later chapter for instruction);
4) fix the lower end of the poster scroll on the lower roller. Make sure it’s central and well aligned;

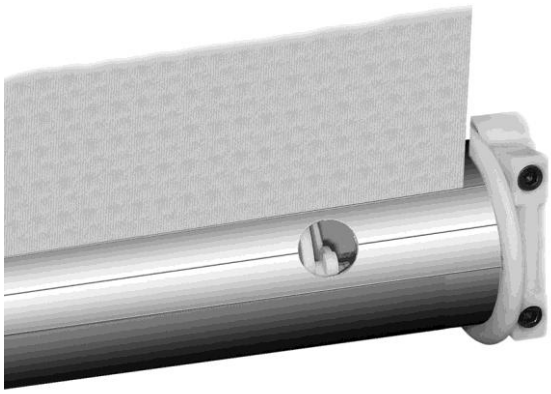

5) Wind the poster scroll one turn onto the lower roller, check the alignment of the hole on the poster scroll footer and the hole on the aluminium hollow and make sure that the scroll-end detector tip can fully pop out. Trim the hole on the poster scroll footer using a scalpel if necessary.

Optionally, the header and footer of the poster scroll may be fixed on the aluminium permanently with high bond material, in which case the posters will be detachably fixed to the header/footer.

# Advanced Operations

### 1. Synchronisation

A number of SPDE-76A systems can be synchronised to enhance the visual impact. To setup a synchronised operation, The SPDE-76A systems need to be interconnected via hardwiring or wireless devices.

In each synchronised operation, only one SPDE-76A can be set as “Master”; all the rest should be set as “Slave” (see Page 7).

COM1 is the dedicated port for synchronisation (also see Page 7). All system should be interconnected in parallel with two-way cables as shown below:

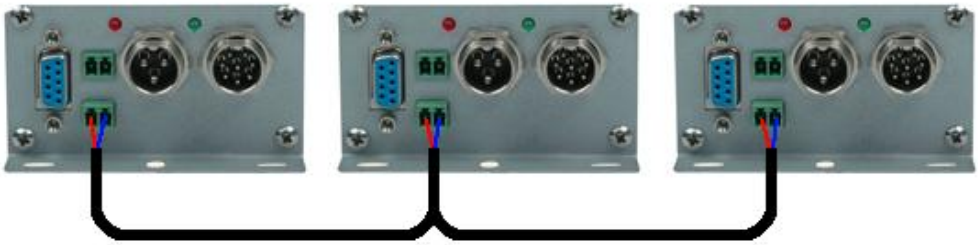

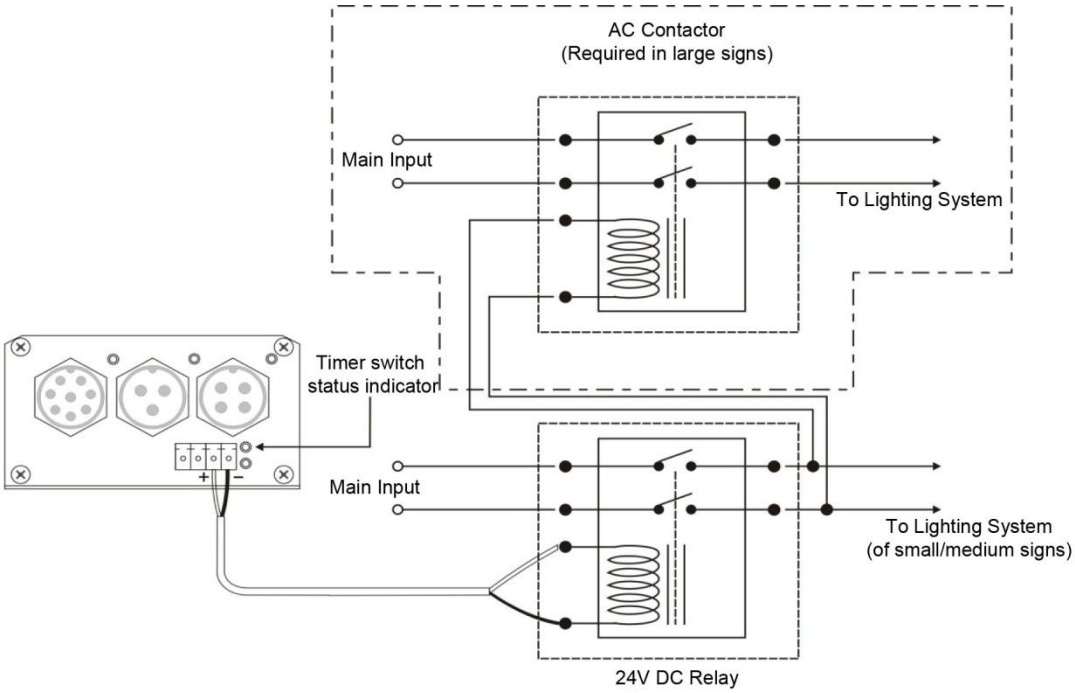


For information about wireless synchronisation, please refer to the relevant user’s manual.

### 2. Built-in Timers

Besides the built-in “Scroller Timer” that controls the scrolling display, SPDE-76A also offers a “Lighting Timer” for controlling the lighting system (or other devices) separately.

The SPDE-76A main controller provides a 24V DC control output for driving a relay. For large load, AC Contactor might be necessary.

The schematic diagram on the right shows the typical electrical connection for the SPDE-76A’s Lighting Timer.

### 3. Power-off Poster Settling (POPS)

When the main power goes off for any reason, POPS automatically sets the scrolling display to a complete poster.

POPS requires a battery to function. The connection is shown on the left.

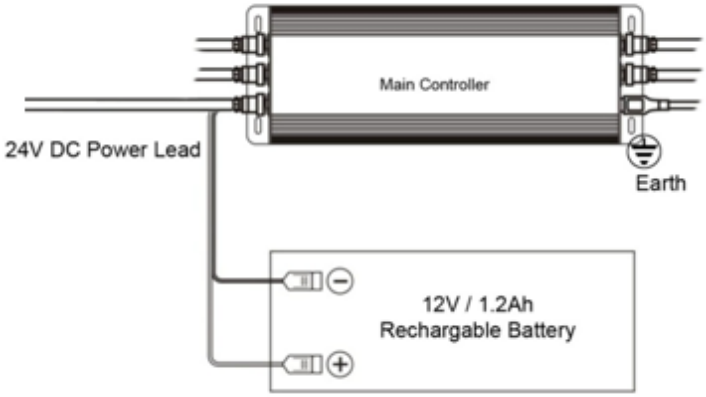


### 4. Using other peripherals

SPDE-76A supports a number of peripherals, such as Scroll-A-Sound, GSM Monitor, etc.

These peripherals are usually connected to COM2 of SPDE-76A's main controller and draw 24V DC power from SPDE-76A's power supply unit.

Please refer to appropriated user's manual for more details.

POPS requires a battery to function. The connection is shown on the left.

# Troubleshooting

To start troubleshooting, plug in the handheld programmer first.

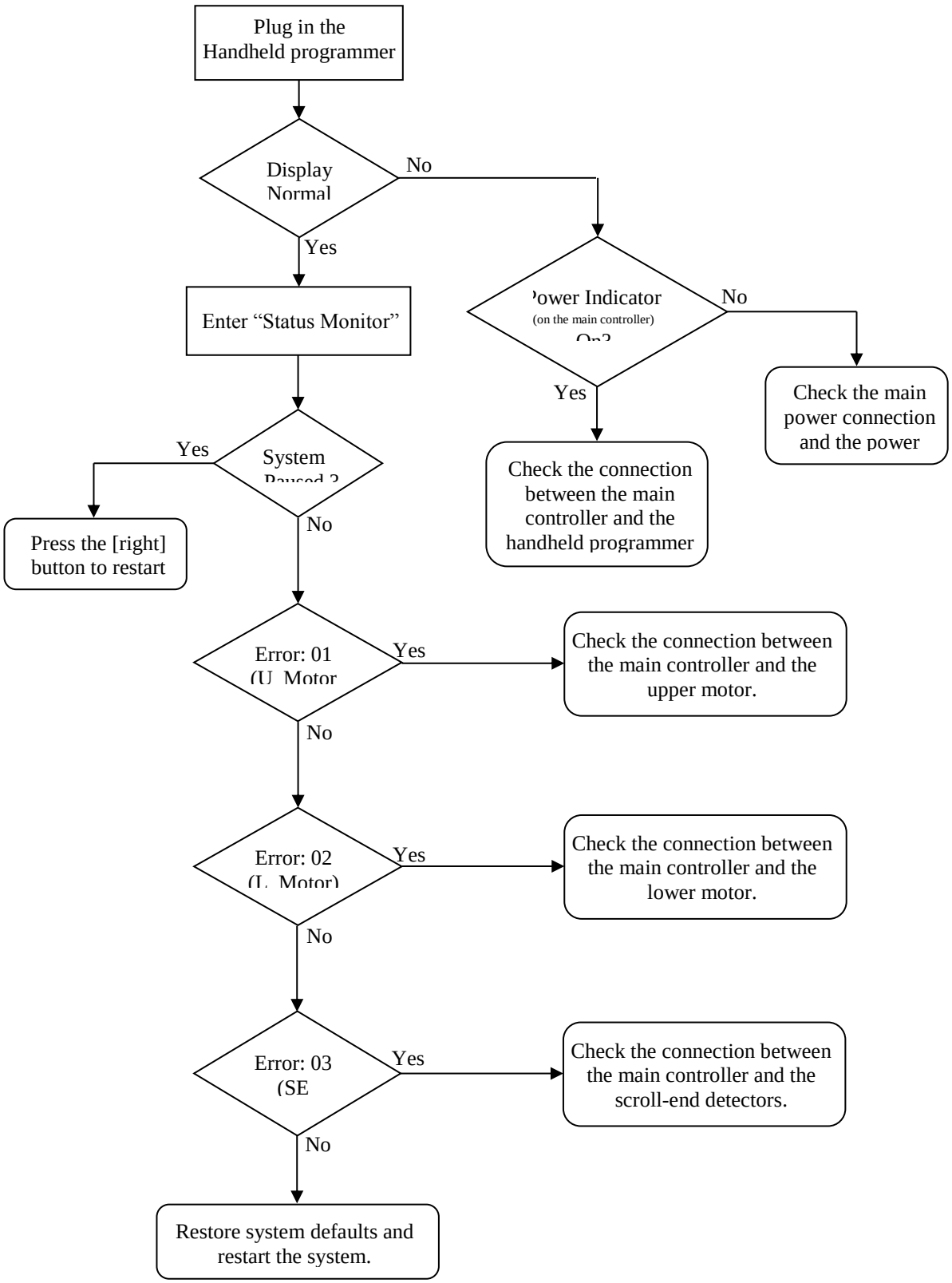

# Specifications

| | |
|---|---|
| **Package dimensions** | Carton 1 (aluminium hollows): 305x19x9 (cm) [1]<br>Carton 2 (other parts): 36x24x20 (cm) |
| **Gross weight** | 16.5kg |
| **Net weight** | 13kg |
| **Maximum size of scrolling display** | 3 metres wide by 2 metres high [2]<br>or<br>6 square metres |
| **Power supply** | 100 – 120 V AC<br>or<br>200 – 240 V AC<br>or<br>12V to 24V DC-DC converter<br>*(Please specify when order)* |
| **Power consumption** | Average < 45W<br>Peak <75W |

[1] Based on kit with 3 meter aluminium hollows.

[2] For larger size up to 5 metres wide or 8 square metres, SPDE-76AE uses reinforced aluminium hollows.

## *[Appendix] SPDE-76AX Main Controller*

SPDE-76AX is an alternative main controller for SPDE-76A.

Functioning identically as the standard main controller, SPDE-76AX features a more compact casing, relocated electrical connection and different type of connectors.

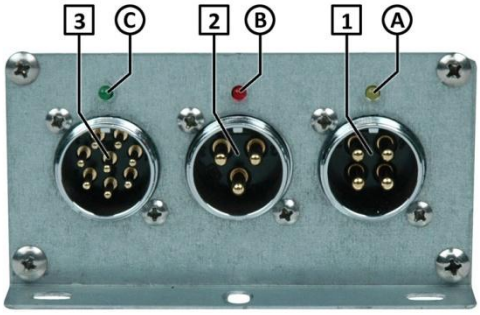


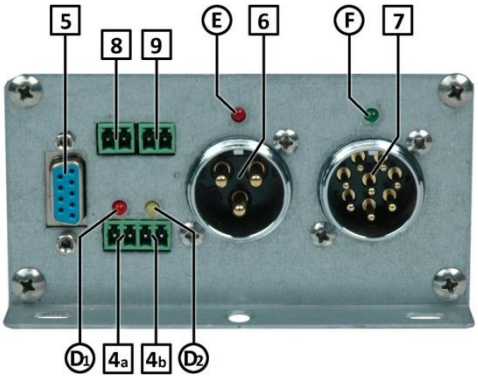


| | |
|---|---|
| 1: Power supply and POPS battery in (24V DC and 12V DC)<br>2: N/A<br>3: N/A<br>4a: Scroller Timer control out (for 24V DC relay)<br>4b: Lighting Timer control out (for 24V DC relay<br>5: Upper motor connector<br>6: Upper scroll-end detector connector<br>7: Lower motor connector<br>8: Lower scroll-end detector connector<br>9: COM1, communication port for synchronisation | 10: COM2, communication port for other peripherals<br>11: Programmer connector, to HHP09 via a shielded USB cable<br><br>A: Power indicator<br>B1: Lighting Timer indicator<br>B2: Scroller Timer indicator<br>C: Upper scroll-end indicator<br>D: Upper motor indicator<br>E: Lower scroll-end indicator<br>F: Lower motor indicator |